International Building Lime Symposium 2005
Orlando, Florida, March 9 -11, 2005

GROUTING MASONRY USING PORTLAND CEMENT-LIME MORTARS*

David T. Biggs, P.E. [1]

Abstract

For commercial construction, masonry standards require that grout be used in reinforced masonry construction. Grout is made from a mixture of portland cement and aggregates with a maximum lime content of one-tenth the volume of the cement. For residential work, some standards allow reinforcing bars to be embedded in Type S or M mortar if modified by adding sufficient water to make the mixture "pourable".

This research indicates that portland cement-lime based mortar has the potential to be an acceptable alternative for grout in reinforced masonry in modified, low-lift applications. In addition, grout proportioned with a higher percentage of lime, similar to mortar, could be acceptable as well. Further research is required to determine specific properties and define construction practices for each material.

Keywords

Mortar fill, grout, portland cement-lime mortar, pull tests, prisms

---

[1] Principal, Ryan-Biggs Associates, P.C., USA, dbiggs@ryanbiggs.com

1 Introduction

In reinforced masonry, the 2002 Masonry Standards Joint Committee (MSJC, 2002a) requires grout to be used to fill cells of hollow masonry and fill cavities of composite construction. For residential construction, some standards allow the use of "pourable" mortars. In spite of codes and standards, masonry contractors in some regions of the United States commonly substitute mortar for grout. The mortar is used as mixed, without additional water added.

Some masonry contractors prefer to use mortar to:

1. Reduce installation costs in low-lift applications when the masonry is to be partially grouted. (Cost is contractor-dependent; some may find full grouting to be more economical.)
2. Reduce the number of mixers used, since industry standards generally require separate mixing of mortar and grout.

Mortar substitution for grout currently requires acceptance by the designer as well as by the building official. The logic for the substitution is that mortar and grout have similar constituent materials and, therefore, may perform similarly. However, this logic ignores the effect of different water contents.

The material standard in the United States for masonry grout is ASTM C 476 Standard Specification for Grout for Masonry (ASTM International). The material standard for mortar is ASTM C 270 Standard Specification for Mortar for Unit Masonry. Fine grout has sand aggregate, portland cement, and lime; coarse grout uses pea stone in addition to the sand. The constituent materials in fine grout are similar to those in mortar. While grouts typically have slumps between 8 and 11 inches, mortars have slumps of approximately 5 to 8 inches.

This paper is a preliminary report on a portion of a study that compares portland cement-lime based mortars to grout in grouting applications. The study is limited to concrete masonry units (CMU) in a modified low-lift grouting application.

2 Background

2.1 Historical

With the introduction of reinforced masonry, two grouting techniques were developed: low-lift and high-lift. While these are industry terms and are not part of the MSJC documents, the terms are used in the 2002 MSJC Specification (MSJC 2002b) to state the criteria for construction.

Low-lift grouting occurs incrementally with the installation of the masonry. Grouting is generally limited to one lift a day. Lift heights are a function of the grout type and the size of the cell or cavity to be filled, with a maximum lift height of 5 feet. Future versions of the MSJC Specification will increase the maximum permitted lift height.

High-lift grouting allows the masonry to be constructed full-height and grouted in pours composed of multiple lifts. Clean-outs are required when the pour height is over 5 feet.

High-slump grouts were developed to provide flowability and strength. They have excess water to allow for moisture loss during construction by absorption into the masonry units. Grouts with high slumps have proven to provide acceptable performance and, therefore, became the standard for grouting regardless of lift height or unit absorption.

In many areas of the country, grouting is performed every one to three courses. Thus, the question arises as to whether a high-slump grout is necessary for applications in which low-lift heights are used. If not, is mortar satisfactory in lieu of grout?

There have been no reported incidences in the literature of failures attributed to mortar being used in lieu of grout. If reported, failures associated with grouting are generally attributed to missing or inadequate filling of masonry. The properties of the grout were not reported.

2.2 Codes and standards

In the 1982 *Uniform Building Code*, mortar was acceptable as a substitute for grout in chimneys and fireplaces. This was subsequently deleted in the 1985 edition.

Residential codes from the Council of American Building Officials (CABO) allowed Type S or Type M mortar, with water added, to be used as grout. CABO became part of the International Code Council, whose International Residential Code (ICC, 2000) also allows Type S or Type M mortar, with water added, to be used as grout. (In later discussions, these will be referred to as pourable mortar or souped mortar.)

2.3 Previous research work

To support the use of mortars in residential construction, previous research (Hedstrom, Thomas, 1991) evaluated mortar used in lieu of fine grout with CMU. Types M, S, and N mortars were mixed to a pourable consistency, with a slump of 7 to 9 inches, and were compared to three grout mixes with a similar slump range. The three grout mixes contained cement and sand but no lime. The aggregate ratios were varied to achieve compressive strengths similar to the mortars. A No. 5 reinforcing bar was pulled in tension from test specimens.

The report concluded that further research was necessary, but that pourable mortars “could become an effective substitute for grout.” No specific limitations were placed upon unit types or absorption.

A report by Brown (1998) on use of mortar in lieu of grout in reinforced hollow-clay walls compared bond strengths developed from three methods of filling the cell space around reinforcement in hollow clay units. The three methods included grouting with standard grout, slushing with mortar, and “souping” with mortar that had been tempered to a slump of about 10 inches. Slushing involved filling the cells of the masonry units with mortar as the walls were laid, without adding water to the mortar to increase its slump.

Specimens were tested in pull-out; some were tested in direct tension and others were tested to evaluate lap splices. The mortar fill was a Type S masonry cement mortar. The compressive strengths from mortar cubes were between 1,076 and 1,802 psi. The souped mortar tested as grout at over 4,500 psi compressive strength. The grout compressive strengths were unrealistically high at over 11,000 psi.

Pull-out test results for the slushed mortar samples were similar to those for the souped mortar. The grouted specimen tests resulted in the highest pull-out results. However, the ratio of the compressive strength of the grout to the souped mortar was approximately 2.44, whereas the ratio of the pull-out strengths was 1.45. This author’s interpretation of these results is that the mortars performed very well in comparison to the grout, if higher compressive strengths are assumed to translate into proportionately higher pull-out capacities.

3 Testing concept

3.1 Goals

This phase of the research tested mortar as a substitute for grout in reinforced masonry by testing the pull-out strength of reinforcement embedded in mortar. The capacity in pull-out is generally the lesser of the bond strength of the reinforcement to the mortar fill or the bond strength of the mortar fill to the units.

3.2 Pull-out tests

No specific ASTM test was used for this work, since none seemed applicable. Therefore, small scale tests were developed to compare the performance of mortar fill to grout when prism-type samples containing a reinforcing bar are exposed to pull-out of the reinforcement. The tests were not intended to represent actual wall performance, but were selected as more representative than pure tension tests of lap splices.

A key component of the study is creating a test that forced a failure in the mortar fill and the grout under pull-out. From the results, it should be possible to evaluate:

- The mortar fill capacity to develop tension in the reinforcement relative to code requirements.
- The mortar fill capacity in comparison to grout to develop tension in the reinforcement.

3.3 Pull-out procedure

Samples were prepared as shown in Figure 1and were constructed inside. The temperature and relative humidity were approximately 75ºF and 85 percent RH during construction and curing.

Each sample was created from a sawn half-unit of 8-inch nominal thickness concrete masonry unit (CMU). Construction was similar to that required by ASTM C 1019 Standard Test Method for Sampling and Testing Gout, which applies to constructing prisms. This includes placement of grout and mortar fill, and consolidation. The reinforcement was placed into the specimen after the grout and mortar fill were consolidated. This method of construction is modified from typical low-lift grouting installation. Due to the large number of samples and the presence of the reinforcement, samples were air-cured rather than placed in a plastic bag. The samples were 31-days old when tested.

Samples were tested in a tensile testing machine. Photograph 1 shows the test configuration. The top bearing plate was fitted with spacer bars to allow bearing of the steel on the CMU face shells and webs, and not on the fill material, to permit slippage of the fill material from the CMU. Photograph 2 shows a close-up of the specimen. Side tension rods tie down the top bearing plate while the jacking mechanism pulls out the reinforcing bar.

Recorded test results were load versus reinforcement slippage until maximum load was applied. The loading was applied by the test equipment at a constant rate of 0.2 inches per minute.

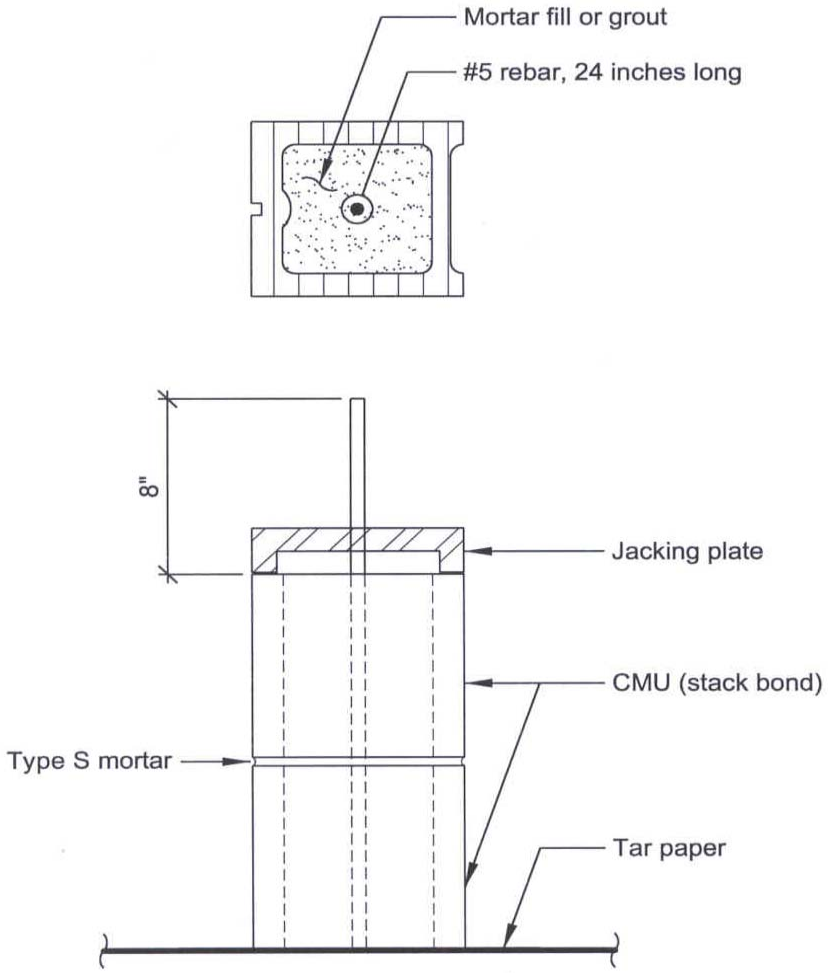

Figure 1 - Test Sample

Photograph 1 - Test Set-Up

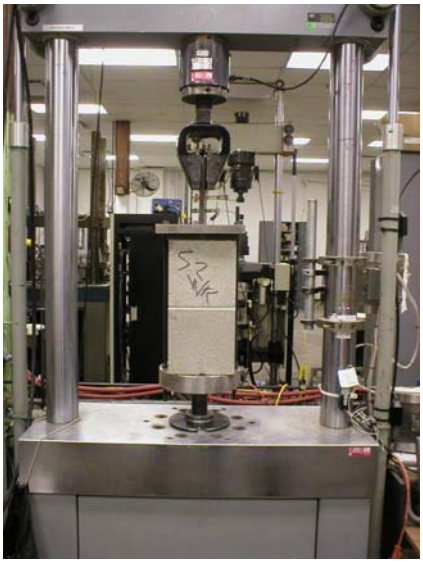

Photograph 2 – Test Specimen

4 Variables

4.1 Bedding mortar

All samples were constructed with mortar proportioned in accordance with ASTM C 270, Type S. The proportions were one part portland cement to one-half part lime to four and one-half parts sand by volume (1:0.5:4.5).

4.2 Mortar fill

Four variations were used with the proportions method of ASTM C 270 to obtain mortar fill. These included:

Mix N: Type N mortar mixed by proportions 1 : 1 : 6.
Mix NSL: Type N mortar mixed by proportions 1 : 1 : 6 with water added to produce 6-inch slump.
Mix S: Type S mortar mixed by proportions 1 : 0.5 : 4.5 (same as bedding mortar).
Mix SSL: Type S mortar mixed by proportions 1 : 0.5 : 4.5 with water added to produce 6-1/8-inch slump.

Two of these mixes represent Type N and Type S mortars, as mixed, with no additional water. The other two (NSL and SSL) had water added to create a consistency that was pourable, to match previous research. All mortar was mixed in a gasoline-powered mortar mixer. Slump measurements were taken with a concrete slump cone.

4.3 Grout

Two variations of grout were used. These included:
Mix G: ASTM C 476 grout mixed by proportions 1 : 0.1 : 3.3 (portland cement to lime to aggregate) with a slump of 10-1/4 inches.
Mix ModG: ASTM C 476 grout modified with extra lime to proportions of 1 : 0.4 : 4.2 with a slump of 9-7/16 inches. Effectively, this is a Type S mortar with a grout-type slump.

Grout is the currently-recommended material in codes and standards. However, recognizing that grout usually produces much higher compressive strength than is normally associated with mortars, a modified mix (ModG) was created with increased lime content to produce a mix with a compressive strength close to 2,500 psi, which was the anticipated compressive strength for the Type S mortar mix.

ASTM C 476 specifies a slump of between 8 inches and 11 inches and allows the grout to be mixed by proportions. MSJC requires grout to conform to ASTM C 476 or to have a minimum compressive strength of 2,000 psi.

4.4 Concrete masonry units

Two types of 8-inch nominal thickness CMUs were used for the pull tests. One was a regular, normal-weight CMU meeting ASTM C 90 Standard Specification for Load-Bearing Concrete Masonry Units. The second was the same as the first except that a liquid integral water-repellent admixture was included in the mix to provide a lower water absorption rate in the unit. The regular unit had a weight of 38 pounds and absorption of 8 to 10 pounds per cubic foot (pcf). The CMUs with water-repellent admixture were not tested for absorption but, historically, the admixture reduces the unit absorption by 8 to 10 percent.

5 Material characterization

5.1 Sand

Test samples were prepared using the same natural sand. The mortar fill sand meets ASTM C 144 Standard Specification for Aggregate for Masonry Mortar, but it also meets the standard for fine aggregates in accordance with ASTM C 404 Standard Specification for Aggregates for Masonry Grout.

5.2 Grout

Grout prisms were made in accordance with ASTM C 1019 to determine compressive strength, except that they were not sealed in a plastic bag. The temperature was approximately 70ºF with a relative humidity of approximately 55 percent. Prisms were kept moist with damp paper towels until block molds were removed. They were then hand-delivered to a testing laboratory and cured in a water tank, consistent with ASTM C 1019.

Three samples of each mix were tested at 7, 14, 28, and 90 days. Results are shown below in Table 1. Both mixes had one unusually low 28-day compressive strength test result that cannot be explained. Where the table gives values that are denoted with an * , the low values were ignored. These * values seem more representative of the actual strength when compared to the 7, 14, and 90 day strengths. Both mixes, G and ModG, easily surpass the minimum 2,000 psi compressive strength recommended in the MSJC documents. The modified grout mix (ModG) was originally selected to represent a high-slump grout with compressive strength close to 2,500 psi.

Table 1 - Grout Compressive Strengths (psi)

Mix	7 Days	14 days	28 Days	90 days
G	3080	4050	3010	4200
	3160	3460	4180	4220
	2790	3950	3840	4140
Mean	3010	3820	3677 (*4010)	4187
Std Deviation	195	316	602	42
COV	6.5	8.3	16.4	1.0
ModG	2490	2470	2760	3240
	2400	2630	1380	3040
	2360	2400	2830	2940
Mean	2416	2500	2323 (*2795)	3073
Std Deviation	67	118	818	153
COV	2.8	4.7	35.2	5.0

5.3 Mortar fill

Since the mortar fill is being used as grout, mortar fill samples were also made in accordance with ASTM C 1019, except they were not sealed in a plastic bag. ASTM C 1019 was intended for grout and is not the traditional method for testing mortars. The temperature was approximately 70ºF with a relative humidity of approximately 55 percent. Prisms were kept moist with damp paper towels until the block molds were removed. They were then hand-delivered to a testing laboratory and cured in a water tank, similar to the grout samples.

Three samples of each mix were tested at 7, 14, 28, and 90 days. Results are shown below in Table 2. Mix S meets the MSJC minimum compressive strength of 2,000 psi; Mix N, Mix NSL, and Mix SSL do not. None of the mixes meet the minimum slump requirements of ASTM C 476.

5.4 Concrete masonry units

The normal-weight concrete masonry units were fabricated in accordance with ASTM C 90. Manufacturer's data indicates that the unit compressive strength is approximately 3,138 psi, based upon testing in accordance with ASTM C 140 Standard Methods of Sampling and Testing Concrete Masonry Units.

5.5 Reinforcement

Twenty-four-inch lengths of No. 5 reinforcement meeting ASTM A 996 Standard Specification for Rail-Steel and Axle-Steel Deformed Bars for Concrete Reinforcement were used for the pull-out tests. The specified yield strength was 60,000 psi, and the specified tensile strength was 90,000 psi. Tested values were slightly higher for each. The specified yield capacity was18.6 kips and the specified tensile capacity was 27.9 kips.

Table 2 - Mortar Fill Compressive Strengths (psi)

Mix		7 Days	14 Days	28 Days	90 Days
N	Mean	1250	1410	1433	1480
	Std Deviation	54	64	151	107
	COV %	4.3	4.5	10.5	7.2
NSL	Mean	1297	1457	1537	1450
	Std Deviation	21	86	133	220
	COV %	1.6	5.9	8.7	15.2
S	Mean	2080	2137	2547	2290
	Std Deviation	71	186	90	184
	COV %	3.4	8.7	3.5	8.0
SSL	Mean	1757	1890	1800	2207
	Std Deviation	48	124	83	48
	COV %	2.7	6.6	4.6	2.2

5.6 Masonry compressive strengths

Using the Unit Strength method, Section 1.4B.2.b, Table 2 of the MSJC Specification (MSJC, 2002b), the compressive strength of the masonry (f'_m) was determined based upon Type S mortar in combination with CMU unit strength of 3,138 psi. That table gives f'_m = 2,178 psi (by interpolation). The Unit Strength method produces a lower bound value for the prism strength.

While the grout strength is not included in the development of f'_m, the MSJC Specification requires that the grout either meets ASTM C 476, or the grout compressive strength must exceed f'_m but must not less be than 2,000 psi. Some values of mortar fill compressive strength do not meet the MSJC

minimum requirement of 2000 psi for grout. The origin of the required minimum value of 2,000 psi is unknown. For this study, f'_m will be taken conservatively as 2,178 psi or the mortar fill strength, whichever is less, as shown in Table 3. The results may indicate if the 2,000 psi limitation is justified.

Table 3 - Masonry Compressive Strength

Mix	Mortar Fill Compressive Strength (psi) from Tables 1 and 2	Assumed f'm (psi)
N	1,433	1,433
NSL	1,537	1,537
S	2,547	2,178
SSL	1,800	1,800
G	4,010	2,178
ModG	2,795	2,178

6 Testing results

6.1 Pull-out tests

Figure 2 shows the results of the pull-out tests. It includes results for the regular CMU with the various fill mixes, as well as the CMU with water-repellent admixture. For reference, the yield strength of the reinforcement is plotted. In all cases, the water-repellent CMU specimens gave higher results.

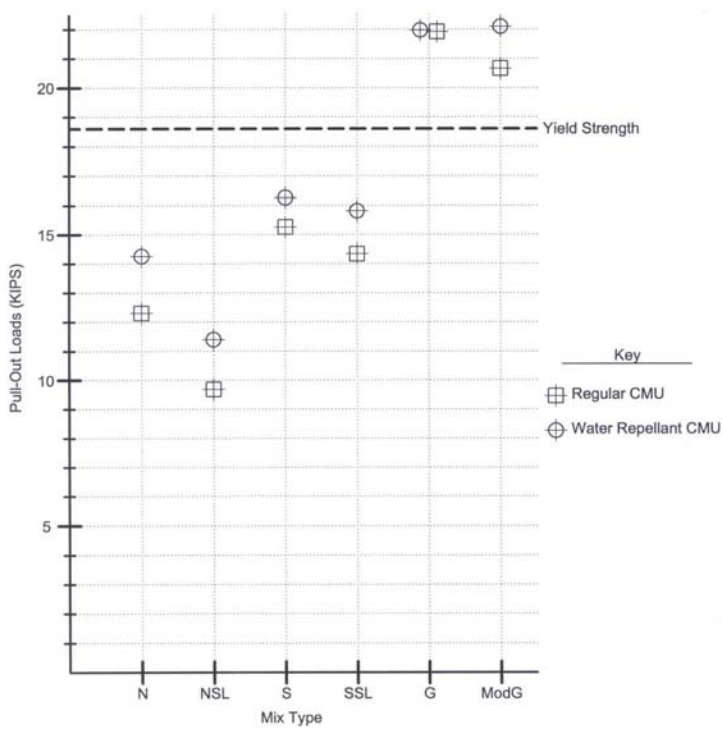

Figure 2 – Pull - Out Tests

6.2 Failure types

Failure mechanisms took several forms. For the purpose of these descriptions, fill is either mortar or grout. The failure modes can be classified as:

1. CMU cracking; fill cracking. Photograph 3 shows one sample where the CMU cracked full height and the fill split around the reinforcement.
2. CMU cracking; no fill cracking, but slippage. Photograph 4 shows a vertical crack and significant slippage of the fill material.
3. No CMU cracking; spalling around reinforcement and reinforcement slippage. Photograph 5 shows a sample where the CMU generally remained intact, but the reinforcement slipped through the fill.

Cracking was identified as outwardly visible cracking. In some samples, cracking occurred internal to the mortar fill or grout. Cracking of the CMU is considered a preferred method of failure because the stress is being transferred to the units.

Fill slippage and slippage of the reinforcement are not preferable modes of failure. Fill slippage was a dominant mode of failure for Mix N with regular CMU (four tests) and also occurred with Mix SSL (two tests) and Mix ModG (one test). With the water-repellent CMU, Mix N (one test) and Mix S (one test) also had fill slippage. Fill slippage is a result of bond failure between fill and units. Shrinkage of the fill reduces the bond.

Reinforcement slippage, independent of significant cracking, was the dominant mode of failure for Mix NSL with water-repellent CMU (six tests), and also occurred with Mix N with water-repellent CMU (one test).

Photograph 3

Photograph 4

Photograph 5

7 Analysis of results

7.1 2002 MSJC - allowable stress method

Equation 2-8 of the MSJC Code gives the development length $l_d = 0.0015 d_b F_s$.

This value assumes a minimum grout strength of 2,000 psi. For the No. 5 reinforcing bar at the allowable stress limit of F_s = 24,000 psi, l_d = 22.5 inches. The test specimens provide an actual reinforcement embedment of 15.6 inches, which was selected to produce the failure mechanism in the mortar fill and grout.

There is no MSJC procedure within the Allowable Stress method for calculating the capacity of a partially developed reinforcing bar. Assuming a linear relationship between embedment length and the stress in the reinforcement, the actual embedment of 15.6 inches produces an allowable stress, f_s = 16,640 psi. This results in a reduced allowable force in the bar of 5,159 lbs. A factor of 2.5 is used to obtain an anticipated ultimate load of 12,898 lbs.

Several of the samples did not achieve the minimum 2,000 psi grout compressive strength. Theoretically, longer development lengths should be required due to the lower-strength material.

7.2 2002 MSJC - strength design

With the introduction of a Strength Design method in the MSJC Code, a new formula for development length was produced. It includes factors for the size of the reinforcement (γ) and cover over the bars (K). Bar diameter and grout strength are also variables. The new formula is:

$$l_d = 0.13 d_b^2 f_y \gamma / \phi K \sqrt{f'_m} \ .$$

γ = 1.0 for a No. 5 bar; K = clear cover or five- bar diameters, whichever is less. In this case, the five-bar diameters govern and K = 3.13 inches. The capacity reduction factor, φ, equals 0.8.

7.3 2005 MSJC

Recent developments in the MSJC Code have resulted in changes to the development length equations. In the latest draft of that document, the development length is the same for both Allowable Stress Design (ASD) and Strength Design. The new formula is $l_d = 0.13 d_b^2 f_y \gamma / K \sqrt{f'_m}$. For the No. 5 bar used in the test, the variables are the same as used in the 2002 Strength Design method.

While the 2005 MSJC provisions have not been made public yet, they are shown here only to illustrate the impact of recent changes on calculation of development length.

7.4 Code summary

For the No. 5 bar, Table 4 indicates the calculated embedment lengths (Length) for each of the code design methods. The Load is the calculated capacity of the reinforcement determined by the actual embedment of 15.6 inches. The compressive strengths from Table 3 were used to calculate the development lengths based on the 2002 MSJC - Strength Design and the 2005 MSJC Code.

While Mixes N, NSL, and SSL did not achieve the required minimum 2,000 psi compressive strength, they were treated in this table as though they did for the 2002 MSJC-ASD calculation method. Their reduced strengths were included in the calculations for the other two methods.

Figure 3 superimposes the pull-out values with these calculated values from the three code criteria. While the 2005 MSJC criteria have not been published, using them is more conservative than relying only on the 2002 criteria, because they require higher loads for comparable development lengths.

Table 4 - Development Lengths

Mix	2002 MSJC - ASD		2002 MSJC - Strength		2005 MSJC	
	Length (inches)	Load (kips)	Length (inches)	Load (kips)	Length (inches)	Load (kips)
N	22.5	12.8	32.0	9.1	25.6	11.3
NSL	22.5	12.8	30.9	9.4	24.7	11.7
S	22.5	12.8	26.0	11.2	20.8	14.0
SSL	22.5	12.8	28.6	10.2	22.9	12.7
G	22.5	12.8	26.0	11.2	20.8	14.0
ModG	22.5	12.8	26.0	11.2	20.8	14.0

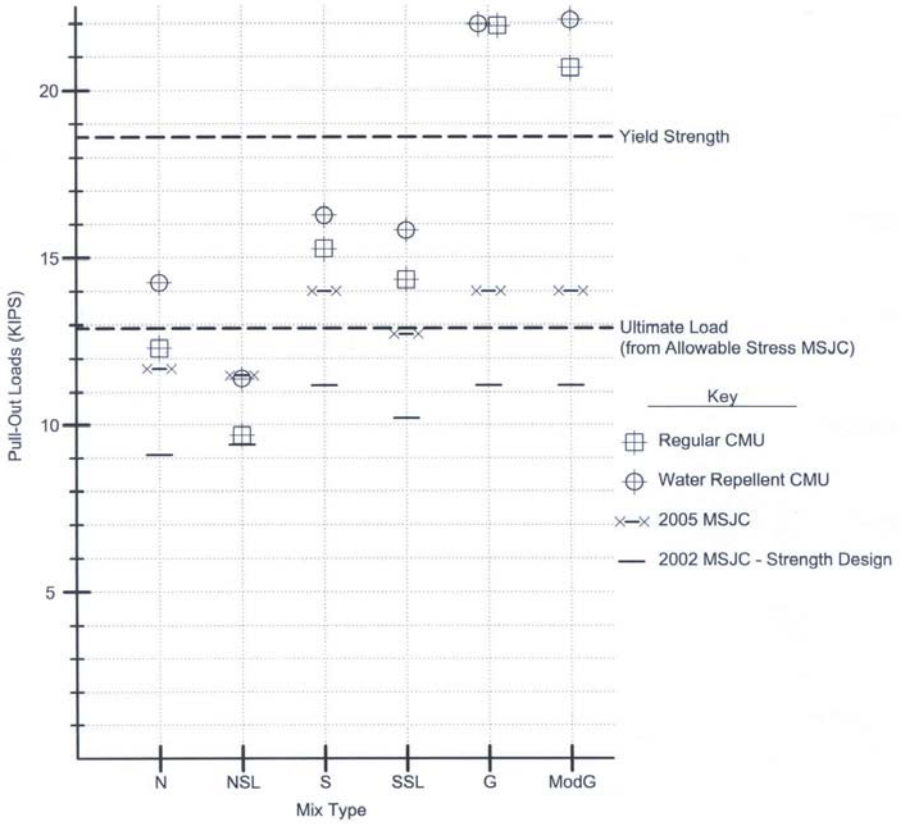

Figure 3 – Pull-Out Results

8 Comments

8.1 General

For the conditions evaluated in this study, these pull-out tests suggest that mortar fill performs better than the "pourable" mortars with a 6-inch slump, which are allowed by the residential codes.

Mortar cubes tested in accordance with ASTM C 780 Standard Test Method for Preconstruction and Construction Evaluation of Mortars for Plain and Reinforced Unit Masonry produced higher strengths than the prisms tested in accordance ASTM C 1019. Table 5 presents the mortar test results for the cubes versus the prisms; the pourable mortars were not tested as cubes. The higher values are likely due to the smaller aspect ratio of the mortar cubes. Mortar fill should be evaluated in accordance with ASTM C 1019.

Table 5 - 28-Day Compressive Strengths for Type N and Type S Mortars

Mortar (mixed by proportions)	**Mortar Cubes**	**Grout Prisms**
Type N	2421 psi	1433 psi
Type S	4132 psi	2547 psi

The use of sand, meeting ASTM C 144, appears to be acceptable for mortar fill.

The pull-out strengths were more accurately determined based upon the mortar fill and grout strengths than the f'_m determined by using the Unit Strength method.

The ModG mix performed almost identically to the conventional grout mix.

8.2 Specific

The pull-out capacities increased with increasing compressive strength of the fill.

The mortar fill mixes achieved higher pull-out values when the CMU contained the water-repellent admixture. Since mortars have low water content, the loss of water could affect the strength. It is likely that the lower absorption of the water-repellent units allowed sufficient water to be retained in the fill to allow more complete hydration.

Pull-out values from the grout mixes were relatively unchanged by the use of CMU with water-repellent admixture. It is likely the grout water content is sufficiently high that the difference in loss of water through absorption into the units was insignificant.

The compressive strengths of Mix N and Mix NSL were less than 1,600 psi. They did not meet the minimum 2,000 psi required by the MSJC documents and did not perform consistently well. These mixes did not achieve adequate pull-out values for the 2002 MSJC – ASD method. However, they did provide adequate pull-outs when the strength of the mortar fill was factored into the equation. They also exhibited significant shrinkage, which had a major effect on the pull-out strengths.

Mix S achieved the minimum pull-out values for all methods of design. The compressive strength of the mix exceeded 2,500 psi.

Mix SSL had test values above the minimum pull-out values for all methods of design. However, since the compressive strength of the mix was approximately 1,800 psi, it did not meet the minimum 2,000 psi strength requirement in the MSJC documents.

Mixes G and ModG achieved the minimum pull-out values for all methods of design. The compressive strength of the mixes exceeded 2,800 psi. The tests results for pull-out with the grout mixes exceeded the yield strength of the reinforcement. This was well beyond what was anticipated or required based upon the MSJC code.

Type M mortar fill was not tested. Given that the Type S mortar fill produces acceptable results, Type M mortar fill with its higher compressive strength would likely have met the minimum pull-out values. Validation testing is needed.

9 Conclusions

The grout samples performed best in the pull-out tests.

While the mortar fill samples tested lower than the grout samples for rebar pull-out, the Type S samples provided acceptable results. While the Type SSL did not achieve the MSJC 2,000 psi minimum compressive strength requirement, it still provided acceptable performance in these tests.

The Type N and NSL samples did not perform well and indicated significant shrinkage.

The results for Type N, Type NSL, and Type SSL seem to indicate that the MSJC minimum 2,000 psi compressive strength requirement for grout has some basis.

The preliminary elemental test results indicate that Type S mortar fill has the potential to be an acceptable alternate to masonry grout for modified low-lift applications of reinforced masonry. Further testing is required to determine the construction parameters.

Mortar fill performed better than “pourable” mortar in all the tests.

While high-slump grout may be necessary for high-lift grouting operations, the high-slump material may not be required for low-lift grouting applications. Mortar fill and “pourable” mortars offer alternatives that are worthy of further consideration.

Within the context of the low lifts investigated in this study, a reduction in the absorption of the concrete masonry units improved the strength of the grout and mortar fill. This needs further study. However, the magnitude of the increased strength does not appear to warrant the use of low-absorption units to specifically increase mortar fill strength. Nevertheless, masonry units that typically have integral water repellents, such as architectural units, may benefit from the lower absorption by increased fill strength.

A second phase of this research involves shear bond testing. This will assess the shrinkage between the units and the fill as well as seek any correlation with the pull-out tests.

Based upon the preliminary work completed thus far, a future phase of testing full-scale wall samples based upon the following criteria seems justified.

A. Use mortar fill with a minimum compressive strength of 2,000 psi, when tested in accordance with ASTM C 1019. This could be Type S or Type M mortar.
B. Use portland cement and lime-based mortar fill meeting ASTM C 270.
C. Construct masonry in a modified low-lift application; investigate various lift heights.
D. Construct specimens as walls, not prisms.
E. Test as flexural walls and bearing walls.
F. Evaluate lap splices.

High-slump grouts proportioned with lime, similar to Type S and Type M mortars, should be further evaluated.

Acknowledgements

Major funding for this research was provided by the International Masonry Institute, National Lime Association, and Bricklayers and Allied Craftworkers, Local No.1, New York, New York.

References

Brown, R., 1998, Feasibility of Using Mortar in Lieu of Grout for Reinforced Hollow Clay Wall Construction, Clemson University (unpublished), prepared for National Brick Research Center, Clemson Wall Systems Committee.

Hedstrom, A, Thomas, R, 1991, Reinforcement Bond Strengths in Portland Cement-Lime Mortars, Masonry Cement Mortars, and Fine Grout, NCMA Research and Development Laboratory.

ICC, 2000, 2000 International Residential Code, International Code Council, Falls Church, VA.

MSJC 2002a, Building Code Requirements for Masonry Structures (ACI 530-02 / ASCE 5-02 / TMS 402-02), Masonry Standards Joint Committee.

MSJC, 2002b, Specification for Masonry Structures (ACI 530.1-02 / ASCE 6-02 / TMS 602-02), Masonry Standards Joint Committee.